■ Outer Dimension:

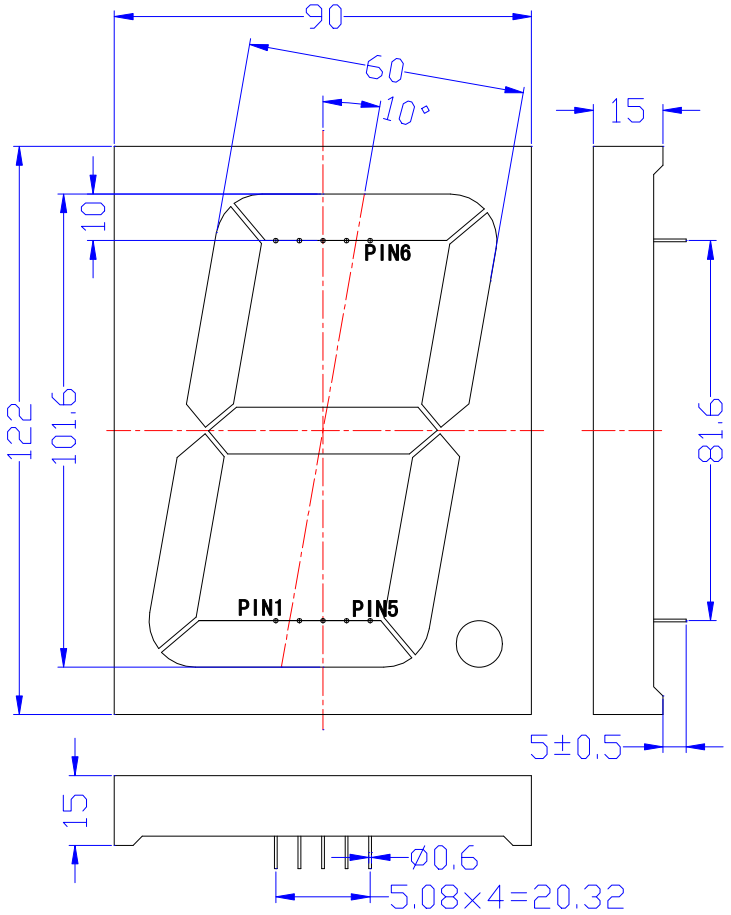

Notes: Unless otherwise stated, The tolerance is ±0.25mm.

■ Circuit Diagram:

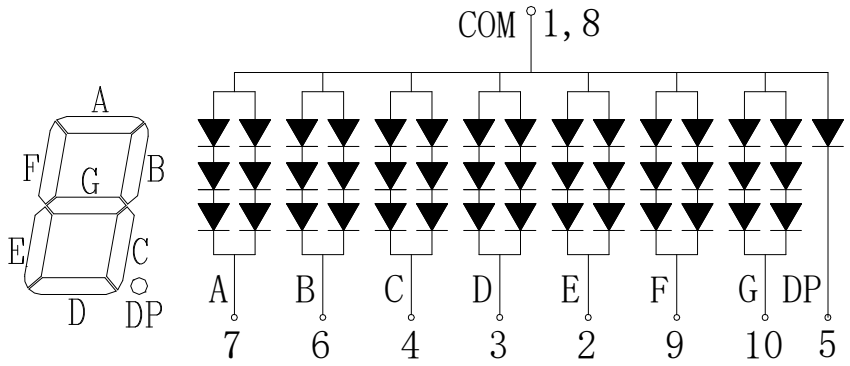

■Pin Connection:

PIN NO.	CONNECTION	PIN NO.	CONNECTION
1	Common Anode	6	Cathode B
2	Cathode E	7	Cathode A
3	Cathode D	8	Common Anode
4	Cathode C	9	Cathode F
5	Cathode DP	10	Cathode G

■Features:

- **High Reliability**
- **Color: AlGaInP Red Digit**
- **Low Power Requirement**

- Easy Assembly

■Description:

- Single Digit Display
- Digit Height:101.6mm (4.0″)
- Black Face and Encapsulation With White Epoxy

■Absolute Maximum Rating (Ta=25℃):

Parameter	Symbol	Condition	Color	Rating	Units
Power Dissipation Segment	P_d	—	Red	65	mW
Forward Current Segment	I_F	—	Red	20	mA
Derating Of If Per Segment	ΔI_F	Ta≧50℃	Red	0.30	mA/℃
Peak Forward Current Per Segment	I_{FP}	1/10 Duty 10KHz	Red	100	mA
Reverse Voltage Per Segment	V_R	—	Red	5	V
Operating Temperature Range	Topr	—	—	-35～+85	℃
Storage Temperature Range	Tstg	—	—	-35～+85	℃

■Electrical/Optical Characteristics Rating(Ta=25℃)

Item	Symbol	Test conditions	Location	Color	Rating			Units
					Min.	Typ.	Max.	
Forward Voltage	V_F	I_F=20mA	Per Segment	Red	5.1	6.3	7.5	V
		I_F=20mA	DP	Red	1.7	2.1	2.5	V
Reverse Current	I_R	V_R=5V	Per Segment	Red	—	—	100	μA
Luminous Intensity	I_V	I_F=10mA	Per Segment	Red	—	20	—	mcd
Peak Emission Wave Length	λ_D	I_F=20mA	Per Segment	Red	628	631	636	nm
Spectral Line Half Width	$\triangle\lambda$	I_F=20mA	Per Segment	Red	—	20	—	nm
Luminous Intensity Matching Ratio	I_{v-m}	I_F=20mA					2:1	

■Pb, Cd, Hg, Cr+6, PBBs, PBDEs 6 Substances Complies To RoHS Standard.

■Soldering Conditions: Soldering Temp. ≦+260℃, Soldering Time. ≦3sec.

(at 2mm Distance from The Case of Reflector Edge)