■ Outer Dimension:

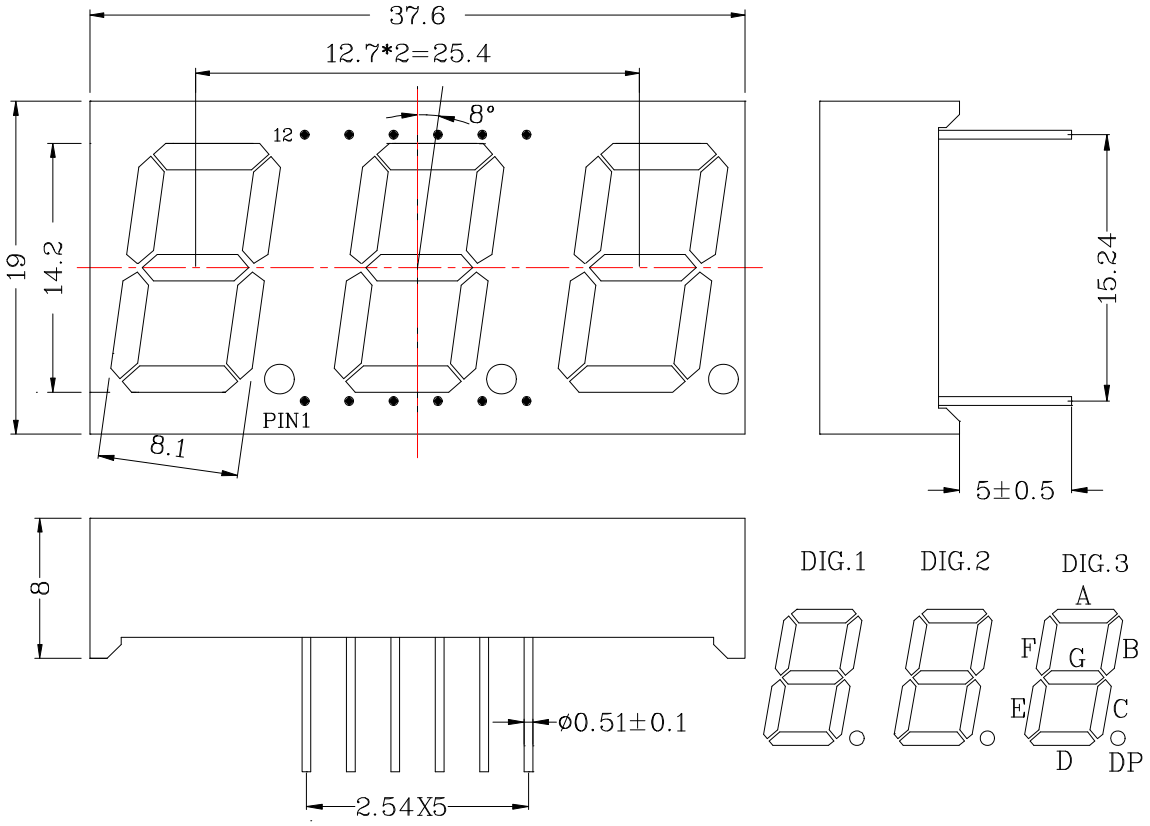

Notes: Unless otherwise stated, The tolerance is ±0.25mm.

■Circuit Diagram:

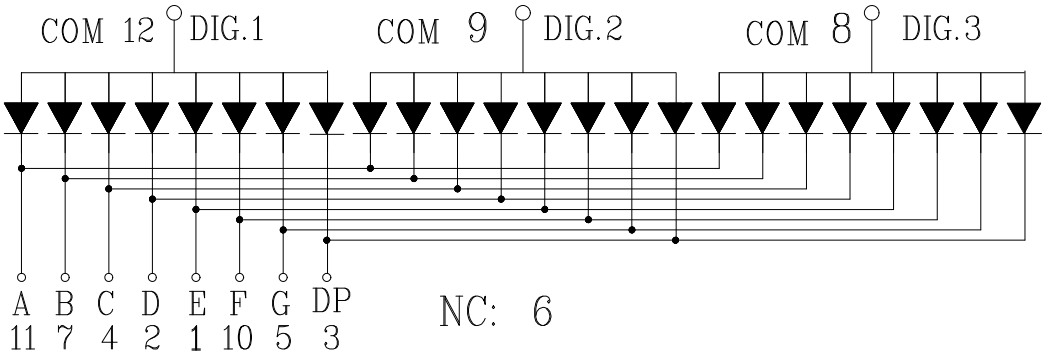

■Pin Connection:

PIN NO.	CONNECTION	PIN NO.	CONNECTION
1	Cathode E	7	Cathode B
2	Cathode D	8	Common Anode DIG3
3	Cathode DP	9	Common Anode DIG2
4	Cathode C	10	Cathode F
5	Cathode G	11	Cathode A
6	NC	12	Common Anode DIG1

■Features:

- High Reliability
- Color: AlGaInP Blue Digit
- Low Power Requirement
- Easy Assembly

■Description:

- Three Digit Display
- Digit Height:14.2mm (0.56″)
- Black Face and Encapsulation With White Epoxy

■Absolute Maximum Rating (Ta=25℃):

Parameter	Symbol	Condition	Color	Rating	Units
Power Dissipation Segment	P_d	—	Blue	65	mW
Forward Current Segment	I_F	—	Blue	20	mA
Derating Of If Per Segment	ΔI_F	Ta≧50℃	Blue	0.3	mA/℃
Peak Forward Current Per Segment	I_{FP}	1/10 Duty 1KHz	Blue	100	mA
Reverse Voltage Per Segment	V_R	—	Blue	5	V
Operating Temperature Range	Topr	—	—	-35～+85	℃
Storage Temperature Range	Tstg	—	—	-35～+85	℃

■Electrical/Optical Characteristics Rating(Ta=25℃)

Item	Symbol	Test conditions	Location	Color	Rating			Units
					Min.	Typ.	Max.	
Forward Voltage	V_F	I_F=20mA	Per Segment	Blue	1.7	2.1	2.6	V
Reverse Current	I_R	V_R=5V	Per Segment	Blue	—	—	100	μA
Luminous Intensity	I_V	I_F=10mA	Per Segment	Blue	—	20	—	mcd
Dominant Wave Length	λ_D	I_F=20mA	Per Segment	Blue	465	470	475	nm
Spectral Line Half Width	$\Delta\lambda$	I_F=20mA	Per Segment	Blue	—	30	—	nm
Luminous Intensity Matching Ratio	I_{v-m}	I_F=20mA					2:1	
Light Leakage	—	I_F=10mA	Adjacent segment				2.0%	

■Pb, Cd, Hg, Cr+6, PBBs, PBDEs 6 Substances Complies To RoHS Standard.

■Soldering Conditions: Soldering Temp. ≦+260℃, Soldering Time. ≦3sec.

(at 2mm Distance from The Case of Reflector Edge)

数码管，发光二极管，背光源，可靠性承诺书					
NO.	实验项目	依据标准	实验条件	实验时长/循环项目	满足要求
2	低温保存		（-40±5）℃	72H	(1)亮度值（IV）的变化，实验前与实验后＜50%； (2)VF 量测值不超过本公司成品之规定范围之内； (3)电性量测值实验后衰减＜20%
3	高温高湿工作	GB/T 2423.3-93	（85±5）℃ （85±5）%RH @If=10mA	168H	
4	高温高湿通断		（85±5）℃ （85±5）%RH @If=10mA 1S 开/1S 关	168H	
5	寿命点亮		（25±5）℃（20±2）mA	72H	
6	温度循环		（-40±5）℃ 15min ∫5min (100±5)℃ 15min	5Cycle	
7	冷热冲击		H:+100℃ 5min ∫10 sec L:-10℃ 5min	5Cycle	
8	盐雾实验		5%NaCl 温度（35±2）℃ 喷 8H 放 16H	72H	