■Outer Dimension:

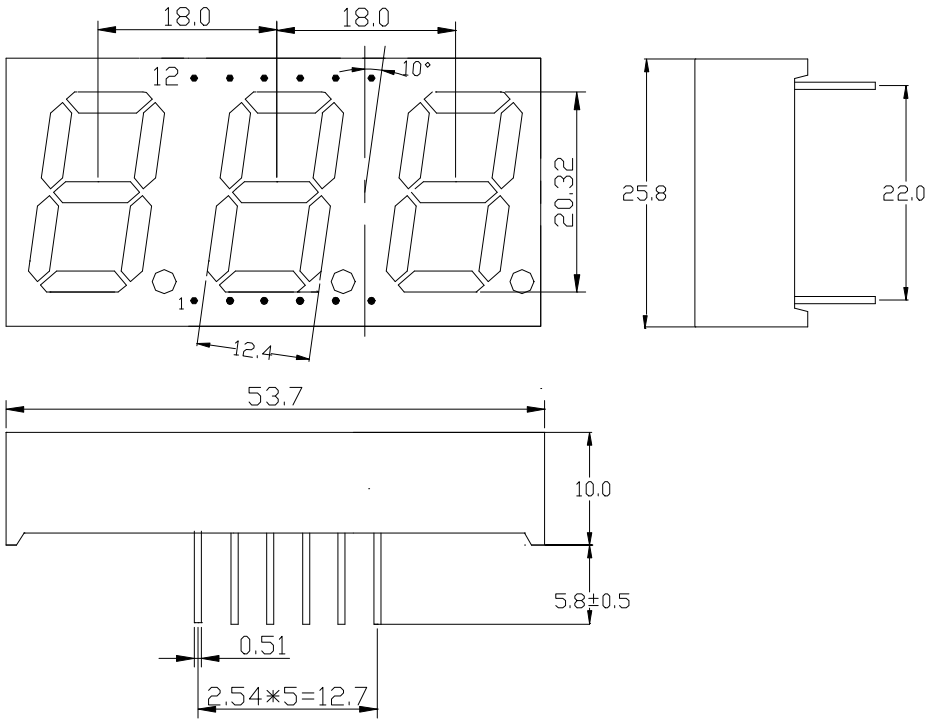

Notes: Unless otherwise stated, The tolerance is ±0.25mm.

■Circuit diagram

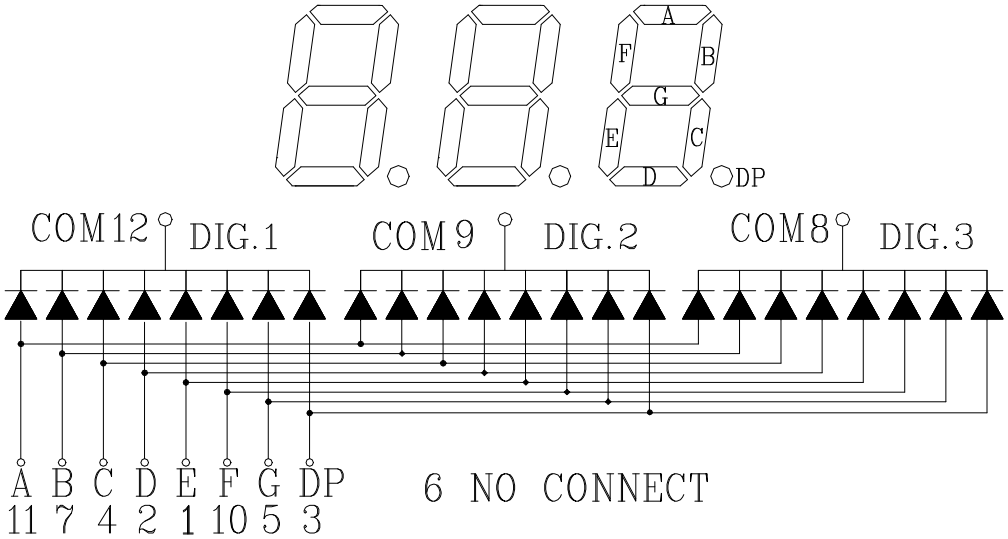

■Pin Connection:

PIN NO.	CONNECTION	PIN NO.	CONNECTION	PIN NO.	CONNECTION
1	Anode E	5	Anode G	9	Common Cathode DIG.2
2	Anode D	6	NC	10	Anode F
3	Anode DP	7	Anode B	11	Anode A
4	Anode C	8	Common Cathode DIG.3	12	Common Cathode DIG.1

■ **Features:**

- High Reliability
- Color : Green Digits
- Low Power Requiremen
- Easy Assembly

■ **Description:**

- Three Digit Display
- Digit Height:20.32mm(0.8”)
- Black surface and Molding With White Epoxy Common Anode

■ **Absolute Maximum Rating (Ta=25℃):**

Parameter	Symbol	Condition	Color	Rating	Units
Power Dissipation Per Segment	Pd	—	Green	80	mW
Forward Current Per Segment	I_F	—	Green	60	mA
Derating Of If Per Segment	$\triangle I_F$	Ta≧25℃	Green	0.33	mA/℃
Peak Forward Current Per Segment	I_{FP}	1/10 Duty 1KHz	Green	100	mA
Reverse Voltage Per Segment	V_R	—	Green	5	V
Operating Temperature Range	Topr	—	—	-35～+85	℃
Storage Temperature Range	Tstg	—	—	-35～+85	℃

■ **Electrical/Optical Characteristics Rating(Ta=25℃)**

Item	Symbol	Test conditions	Location	Color	Rating			Units
					Min.	Typ.	Max.	
Forward Voltage	V_F	I_F=20mA	Per Segment	Green	—	3.4	4.0	V
Reverse Current	I_R	V_R=5V	Per Segment	Green	—	—	100	μA
Luminous Intensity	I_V	I_F=10mA	Per Segment	Green	—	—	—	mcd
Dominant Emission Wave Length	λ_D	I_F=20mA	Per Segment	Green	565	570	575	nm
Spectral Line Half Width	$\triangle\lambda$	I_F=20mA	Per Segment	Green	—	15	—	nm
Luminous Intensity Matching Ratio	I_{v-m}	I_F=10mA					2:1	

■**Pb, Cd, Hg, Cr+6, PBBs, PBDEs 6 Substances** Complies To RoHS Standard.

■Soldering Conditions: Soldering Temp. ≦+260℃, Soldering Time. ≦3sec.

(at 2mm Distance from The Case of Reflector Edge)